Fall and Winter Management

At the end of the main nectar flow, hives are reduced to two or three supers. The beekeeper must now decide whether or not to winter the colonies.

Robbing

At this later time of the year, robbing situations can develop quickly. Colonies have large field forces that are no longer involved in collecting nectar and pollen and that continue to search for food sources. Weaker colonies may be completely robbed unless preventive steps are taken. Any hive manipulations must be done as quickly as possible or when the bees are not flying, and exposure of honey and syrup should be avoided. If certain colonies are being "picked on," they may be moved or turned, so their entrances are facing in the opposite direction. Place entrance reducers on all colonies.

Since robbing is an efficient means of spreading bee diseases, give antibiotics to each colony, whether it is to be killed or wintered, after the last honey super has been removed.

Package Operations

Colonies should be reduced to one or two boxes at the end of the main nectar flow. This will usually be in mid-August in northern areas and one or two weeks later in the south. It is best to kill the colonies fairly soon after the nectar flow is over, to retain honey and pollen stores in the brood chambers for next year's colonies. Large commercial operators generally begin to kill colonies right away to get everything finished in short order.

Once killed, bees are generally shaken or blown from the brood chambers in the bee yard. Hive equipment is then loaded onto the truck and returned to the storage area. Sometime between the fall and the following spring, brood chambers must be prepared for the next season's packages, as outlined in Chapter 5. This sorting may be done at the time of killing or at some time during the winter months if a heated area is available.

Some beekeepers prefer to hatch brood combs before storing their equipment. This approach avoids having capped brood hatch in storage after the colonies are killed. Also, the following year's bees will not have the task of uncapping and removing dead brood.

Combs containing capped brood are placed in supers and stacked on a few remaining live colonies. After one or two weeks, these colonies are killed after the brood has emerged.

Note: If there is any history of American foulbrood in the apiary, this procedure is not recommended as it could serve to spread disease. Until they are killed, these colonies should be medicated with antibiotics.

Using Calcium Cyanide to Kill Honey Bee Colonies

Calcium cyanide is presently registered in Canada for use in killing bee colonies. It is marketed in both dust and granular formulations, the dust formulation being used by the beekeeping industry. Calcium cyanide reacts with moisture in the air to release hydrogen cyanide, a clear gas smelling of bitter almond, and it leaves a residue of calcium hydroxide, a harmless dust. Since the closure of the United States border for live honey bees, there has been little demand for this product. Calcium cyanide is currently very difficult to find.

Hydrogen cyanide is *powerfully toxic* to humans as well as to insects as it acts to inhibit the supply of oxygen to body cells. A dosage as low as 200 parts per million will quickly kill a person through inhalation, ingestion or skin contact. For this reason, beekeepers must be extremely careful in handling calcium cyanide. Symptoms of minor exposure are weakness, dizziness, headache, nausea, vomiting, unsteadiness of gait and a feeling of suffocation. Greater exposure will cause fainting, cessation of breathing and death. If exposure has occurred, seek medical attention right away.

Calcium cyanide should be kept in its original container, clearly labelled and stored in a locked or secure place vented to the outside. It should not be carried in truck cabs or left in car trunks for any length of time. Containers should be checked periodically for corrosion or breaks, and empty containers should be crushed and buried.

When using calcium cyanide in the field, don't work alone and try to work upwind of the chemical. Rubber gloves and safety goggles or respirators are recommended. Do not get cyanide dust on your skin or in your eyes. Wash your hands and face between each yard, and change clothes as soon as possible after finishing for the day.

Colonies should be killed during non-flying conditions, such as in cool weather or in the early morning or late evening. Calcium cyanide should be used according to the label directions: 12.5 - 25 g (1-2 tablespoons) of calcium cyanide are sprinkled on a paper plate or sheet of cardboard and slipped into the hive entrance. Once the chemical is applied, entrances are blocked and the hives kicked or jarred to stir up the bees. The hives are then left for at least 30 minutes, after which the hives are thoroughly aired before removing them from the field. This delay and the ventilation allow the hydrogen cyanide to effect a complete kill and then dissipate before the beekeeper must handle the hive equipment.

Wintering Honey Bee Colonies

The races of honey bees used in Canadian beekeeping are of temperate origin. They are adapted, to a greater or lesser extent, to survive a long, cold winter by forming a cluster and consuming food stored during the summer to generate heat. The technique of wintering colonies of bees in hives simply takes advantage of the colony's natural inclination, and management techniques have been developed that complement the bees' tendencies.

Wintering honey bee colonies is not a new idea. Before package bees were available, wintering was a necessity, and much literature published in the early part of the twentieth century had to do with the refinement of wintering techniques. The advent of the package industry changed Canada's beekeeping industry, and wintering was no longer essential in the prairie provinces. However, over the past couple of decades, there has been an increasingly strong interest in wintering because by importing packages each year, the beekeeper is also importing any problems present in the colonies producing the packages. Diseases such as American foulbrood (AFB), European foulbrood (EFB), nosema and chalkbrood may all be transmitted by adult workers. The possibility of importing other pest problems such as tracheal mites, Africanized bees or varroa mites is also cause for concern.

Beekeepers who have committed themselves to wintering have done so for a number of reasons. Economically, production costs are somewhat lower for wintering operations despite extra sugar, labour and wintering costs. Buying package bees is considerably more expensive than operating wintered hives.

With wintering, beekeepers can make their own stock selection and eliminate stock that does not suit their needs. These beekeepers can then become, to some extent, self-sufficient. The management of wintered colonies is spread over a longer time. If managed correctly, wintered colonies will produce more honey, especially in the early part of the nectar flow. During later flows, for instance in August, package colonies catch up to the productive capacity of wintered colonies.

Outdoor wintering requires special consideration to details and the colonies' requirements. The colonies' most important need is to be fed sugar syrup early in the fall to ensure they have sufficient resources for the winter.

Certain types of honey, such as canola honey, granulate in the combs and do not make good winter stores. Good locations for winter apiaries may be difficult to find, especially in areas where much of the land is treeless. Severe winter kill of colonies is always a possibility, and beekeepers who winter their bees generally count on at least a 10 per cent reduction in colony numbers through starvation, queenlessness and spring dwindling. This figure may be as high as 30 per cent in the first year, as the beekeeper has put package stock into winter that is not necessarily well-adapted to winter survival. High winter mortality is in itself a form of stock selection.

Other concerns involve hive equipment being exposed to the elements year-round; therefore, its life expectancy is reduced. Spring management is more demanding with wintered than with package colonies. Comb sorting and culling must be done during the spring checks instead of after the field work is finished. Most importantly, wintered colonies must be requeened every one or two years, so the beekeeper must develop a method of regular requeening and may find that queen rearing is necessary to obtain the desired stock.

Proper timing is crucial to the success of wintering, whether indoors or outdoors. Colonies must be moved, fed and wrapped or moved inside well before the onset of winter. A beekeeper cannot

wait until mid-October to decide to winter his or her colonies because by then, it is too late for the proper preparations, and the chances of success are remote.

What to winter

Only healthy, populous colonies with an abundance of young bees and proven young queens should be prepared for winter. A larger cluster will be more efficient at heat generation and retention and will be able to maintain a larger brood area earlier in the spring than will a small cluster. Most colonies that have built up to high populations through the summer will be strong enough to winter well. Weak colonies and those that have queen problems are not as likely to survive the winter out-of-doors and should be united with other colonies or destroyed. With indoor wintering, there is more leeway; nuclei made up in mid-summer, for example, may be successfully wintered indoors in just one brood chamber. Small, four- to six-frame nucleus colonies are also wintered indoors successfully.

Some experienced beekeepers feel the Carniolan and Caucasian races are better suited for prairie wintering operations than the Italian race, although there is a wide range of variation within each race. Italian strains will winter well but may consume more feed than the darker strains, which winter in smaller clusters and with less food consumption.

Feeding colonies for winter

Feeding colonies at any time is stressful for the bees, and the fall feeding is no exception. Colonies should be managed to minimize this stress as much as possible, to avoid both undue disturbance and disease flare-ups. Keeping this concern in mind, beekeepers have three aims in fall feeding:

- to feed as much as necessary to provide all the winter feed each hive requires
- to feed as quickly as possible to have feeding completed as soon as possible before cold weather arrives
- to feed as thick a syrup as possible to minimize the work required by the colony to store the feed for winter

Inner frame feeders, Boardman feeders and small pails or tins will not hold enough: a 15 kg feeder pail or a hive top feeder is recommended. Suitable feeder types are covered in Chapter 4. Thick (2:1) syrup supplies more food in a given volume than does thin, and it makes less work for the bees as well as for the beekeeper.

The sugar syrup must be inverted, evaporated, stored and capped by the bees before the onset of cold weather, all of which takes time. Once cold weather arrives, colonies take the feed much more slowly, if at all, hence feeding should begin in early September to ensure colonies will have the necessary food stores for winter. Feeding is generally finished by early to mid-October in the north and by late October in the south.

The fall may be an opportune time to control some diseases in the honey bee colony. For example, the most effective time to control nosema disease through feeding fumagillin is in the fall. Refer to the disease control guidelines supplied by your provincial Department of Agriculture for specific recommendations and fall disease control programs.

Hives should contain at least four to six combs of pollen or mixed pollen and honey. Pollen is usually abundant during the summer and is collected and stored around the brood nest. If a pollen shortage should occur, a protein supplement may be fed in early spring to boost brood rearing.

Outdoor Wintering

Colonies to be wintered outdoors must be located in sheltered apiary sites with access to early spring nectar and pollen flows (see Chapter 5, Spring Management). If moving is necessary, do so before fall feeding begins to allow the bees time to recover from the stress of moving, as well as to save the beekeeper's back if colonies are not palletized. Colonies should also be arranged in the desired groupings before feeding and should be off the ground either on cleated bottom boards or on pallets.

Colonies in two brood chambers must weigh between 63 and 73 kg (140 and 160 lb). If in three boxes, the total weight should be from 73 to 82 kg (160 to 180 lb). These weights generally ensure a food supply until the next spring's nectar and pollen flows begin. Reduce the bottom hive entrance before feeding begins to eliminate robbing, and keep the entrances reduced to keep out mice.

An upper entrance is an important requirement for successful outdoor overwintering. The colony cluster gives off water vapour as it respires, which rises to the top of the hive and must be allowed to escape. Otherwise, this moisture condenses and freezes, forming an ice blockage between the frames. As the cluster moves into the upper super, it will encounter this ice block and starve. By the time the beekeeper begins the first spring checks, the ice will have melted, and the beekeeper will wonder why the bees starved with a box of honey available. The lower entrance may not be used by the bees during winter; it will often be blocked with snow. This entrance should be reduced to a very small size (e.g. 8 mm) or may be blocked off entirely.

An inner cover with a small entrance hole (7-8 cm x 1 cm) cut from the deep side of the rim and a feed hole in the centre can be used both for fall feeding and wintering (see Figure 15). Alternatively, year-round covers may be made from 19 mm (3/4") plywood cut to the dimensions of the super. These covers have 7-8 cm x 1 cm entrances dadoed on one side and feed holes drilled in the centre that are plugged when not in use. The covers are turned over when the upper entrance is not required. The weight of the plywood and propolizing by the bees will keep the cover in place throughout the year. For increased durability, paint both sides and edges, or dip the covers in wax.

Although colonies can live through mild winters without added insulation, insulation will decrease both colony food consumption and mortality. Therefore, insulation is provided to temper the changes in ambient temperature, protect colonies from drafts, help conserve cluster heat and allow more cluster movement within each hive. Insulation also keeps the hive cavity drier.

Hives may be wrapped individually or in groups of two, four or more. Groups of four are the most common and represent the most efficient use of insulation and of heat retention, with two sides of each hive being exposed and two sides being protected. If hives are grouped in larger numbers, those with three protected sides tend to stay too warm, remaining more active through the winter and consuming more food.

Many insulating materials have been used for wintering beehives. Early reports cite leaves, sawdust, shavings and straw while more modern materials include fibreglass, fibrefill and styrofoam. Recently, hives have been arranged in groups of four and wrapped with fibreglass insulation and building paper. R-20 insulation is placed on top of the four-pack, which is then covered with a common plywood lid.

Upper entrances are provided through inverted inner covers and corresponding holes cut through the insulation. A 3" x 5" (75 mm x 125 mm) piece of 3/8" (9 mm) plywood, with coinciding hole, is nailed against the hive to push the insulation snugly in place around the top entrance. The insulation and lid are tied in place with twine, string, wire or tarp hooks (Figure 44).

Figure 44. Hives prepared for winter in insulated "four-pack" arrangement. Hives are wrapped with fibreglass insulation and 6 mil polyethylene and have a common cover. Plywood rectangles coincide with top entrances.
(Photo D. Murrell)

Winter insulation wraps are commercially available or can be made at home. One such wrap is constructed using fibreglass batts totally enclosed in 6 mil black polyethylene. The wrap consists of a single piece and avoids any exposed insulation. It is easy to handle, is relatively mouse-resistant and is easy and economical to construct. The polyethylene protects the insulation from the elements and should greatly prolong the life of the wrap. Commercial beekeepers across western Canada have used the wraps successfully.

R-12 fibreglass, 23" (58 cm) wide batts are placed on a 6-7 foot (2 m) wide sheet of 6 mil black polyethylene. One side of the sheet is folded over the other to cover the batts completely. A medium hot iron is then used over aluminum foil or newspaper to bond the overlapping

polyethylene, thus sealing in the fibreglass. The ends are sealed, leaving the corners open to allow air to escape. Templates are made to cut top entrances in the wrap during construction. A similar wrap can be constructed for top insulation using R-20 fibreglass insulation, or one can simply place two pieces of 15 inch R-20 batts inside a standard barrel liner for the top insulation.

Mice and skunks can be a problem in colonies wintered outdoors. Take precautions to prevent mouse damage in hives and insulation and to avoid the decimation of colony populations in fall and spring by skunks, as outlined in Chapter 12.

Indoor Wintering

Colonies to be wintered indoors are fed with sugar syrup before being moved into the wintering building. As is the case for outdoor wintering, colonies should be fed beginning in early September to ensure gross weights of 62-68 kg (140-150 lb) for two-storey hives or 39-45 kg (85-100 lb) for one-storey hives.

Once feeding has finished and the weather has turned cold, the hives are moved into winter storage. On the prairies, this movement typically occurs during late October or early November. Where hives are on pallets, moving them with forklifts may be accomplished quickly and with little disturbance to the bees. If hives are to be handled manually, however, greater time and labour will be required.

Several basic requirements for an indoor wintering facility include the following:

- temperature control
- air circulation
- ventilation
- light exclusion

Before constructing or modifying a building for indoor wintering, beekeepers should visit other indoor wintering facilities and contact their apiculture office for updated information on technology changes.

Ventilation principles of wintering buildings

Honey bee colonies give off heat, water vapour and carbon dioxide (CO^2). The ventilation system removes these by-products by exhausting storage air and replacing it with outdoor air. The temperature, relative humidity and gas composition of the storage air is controlled within a range most comfortable for the bees.

In the late fall and early spring when outdoor temperatures are mild, the heat produced by the bees is greater than the amount required to maintain the storage temperature. This excess heat is removed by exhausting warm storage air and replacing it with cool outdoor air. Exhaust fans controlled by thermostats are used to exhaust this heat. Under these mild conditions, the ventilation provided to control temperature is more than adequate to remove the water vapour and CO^2 produced by the bees. No special provision to control humidity is required.

When the outdoor temperature is very cold, all the heat produced by the bees is required to maintain the inside storage temperature. As a result, the thermostatically-controlled exhaust fans seldom run. However, the bees continue to produce water vapour and CO^2, and unless these by-products are removed, they will continue to build up and will eventually cause problems. A low level of continuous ventilation is therefore used to control water vapour and CO^2.

Figure 45 illustrates the heat and moisture balance for a wintering building under typical winter conditions. Each colony produces approximately 3 to 10 grams of water vapour per hour and 8 to 28 watts of heat. Under normal winter conditions, the heat and moisture production are at the lower end of these ranges.

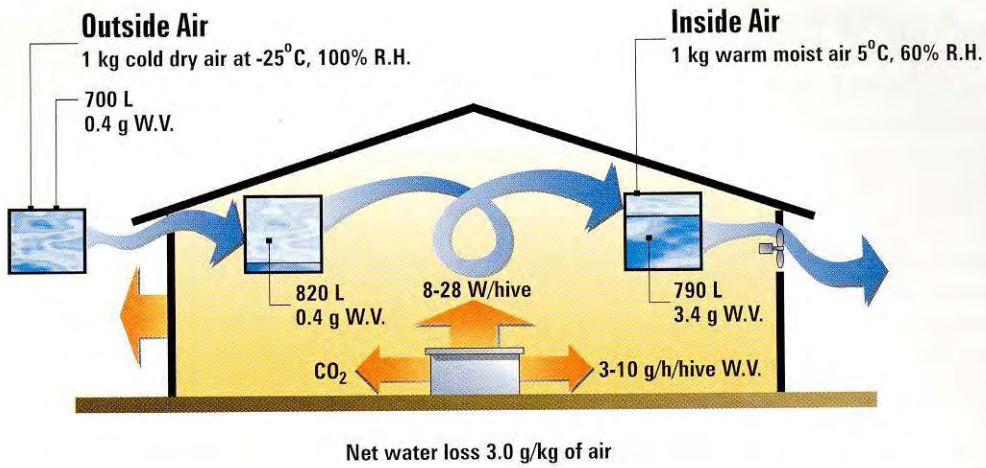

Figure 45. Winter ventilation for overwintering hives

Moisture is removed by replacing storage air with outside air. Even though the relative humidity (R.H.) of cold outdoor air is high when it is introduced into the building, its water holding capacity is increased when it is heated to the storage temperature. For example, 1 kg of outdoor air at -25ºC and 100 per cent R.H. contains only 0.4 grams of water vapour. When this same kilogram of air is heated to 5ºC, however, at a relative humidity of 60 per cent (a desirable storage humidity), it can hold 3.4 grams of water vapour.

Thus, for each kilogram of storage air exhausted at 5ºC and 60 per cent R.H. and replaced with outdoor air at -25ºC and 100 per cent R.H., there is a net loss of 3.0 grams of water vapour. Based upon typical conditions, a minimum continuous ventilation rate of 0.25 L/s (litres/second) per hive is required in winter to remove the water vapour produced by the bees.

Continuously exhausting warm storage air and replacing it with cold outdoor air removes a large amount of heat from the storage. To heat the minimum ventilation rate of 0.25 L/s per hive from -25ºC to 5ºC requires approximately 13 watts of power.

In addition to the heat lost through the ventilation system, heat is also lost by conduction through the building components. This loss is approximately 4 watts per hive at -25°C. Therefore, the total building heat loss is approximately 13 plus 4, or 17 watts per hive. However, the colonies typically produce 10 to 12 watts of heat per hive. The difference between the two heat flows is approximately 5 to 7 watts per hive and must be supplied by a supplementary heating system.

Fan-forced electric heaters are normally used to provide this heat. For design purposes, they should be sized on the basis of 10 watts per hive. This design allows for some factor of safety, since the heat production rate of the bees can vary considerably. The electric heaters are thermostatically controlled to maintain the desired storage temperature.

A problem may occur in late spring prior to removing the bees from storage. Outdoor air temperatures at this time of year can often rise to 15°C or more. Therefore, it becomes difficult to use outdoor air to maintain storage temperatures of 4 to 7°C.

The approach of most beekeepers has been to use high airflow rates, maintaining the storage within a few degrees of the outdoor temperature. Since these periods usually last only a few hours (mid-day), this method has proven relatively successful. It seems the bees can tolerate storage temperatures as high as 15°C for a short period, provided they have a good supply of fresh air. Recirculating a high airflow is also important because it helps remove the heat from the hives.

Design recommendations

1. Building Size

The interior building area normally varies from 0.25 to 0.3 m^3 (2.7 to 3.2 ft^3) per hive, allowing from 0.7 to 0.9 m^3 per hive (24 to 30 ft^3 per hive). Loading densities within this range allow plenty of room for air to circulate. Though higher loading densities are physically possible and would reduce building costs, beekeepers who have tried this approach have frequently had more problems wintering. It appears the extra volume of air per hive in a larger room moderates temperature fluctuations and permits better air circulation.

2. Building Construction

Practically any building type or shape can be used for wintering bees. Insulation in the walls and ceiling should be equivalent to RSI 3.5 and RSI 5.0, respectively. The building foundation should be insulated with 50 mm (2 in.) of polystyrene insulation.

3. Ventilation System

The amount of heat and moisture produced by the bees can vary widely. Feeding methods, storage temperature, type of bees and many other management factors all affect the rate of heat and moisture production. Ventilation and heating recommendations (Table 6) are therefore based on “average” conditions and can be expected to provide a good storage environment.

Relative humidities for storage typically range from 50 to 70 per cent. Ventilation rates within the guidelines given in Table 6 will normally result in humidities within this range.

Table 6. Ventilation Recommendations

	Fan Capacity (L/s/hive)	Total Capacity (L/s/hive)
Step 1 (minimum, continuous)	0.25	0.25
Step 2	0.50	0.75
Step 3	1.00	1.75
Step 4	3.25	5.00
Recirculation System		5.00
Intake area (adjustable) – 10 cm^2/hive maximum to 0.5 cm^2/hive minimum		
Heater capacity – 10 watts/hive		

Most wintering buildings on the prairies use a series of exhaust fans in combination with a recirculation fan and a polyethylene duct distribution system (Figure 46). Intake air is admitted through an adjustable opening near the recirculation fan. This air is mixed with recirculated room air and distributed by the polyethylene duct. The recirculation fan and polyethylene duct ensure uniform conditions are maintained throughout the room. The airflow past the hives increases heat transfer from the hives. This cooling effect is especially important after a temporary warm period.

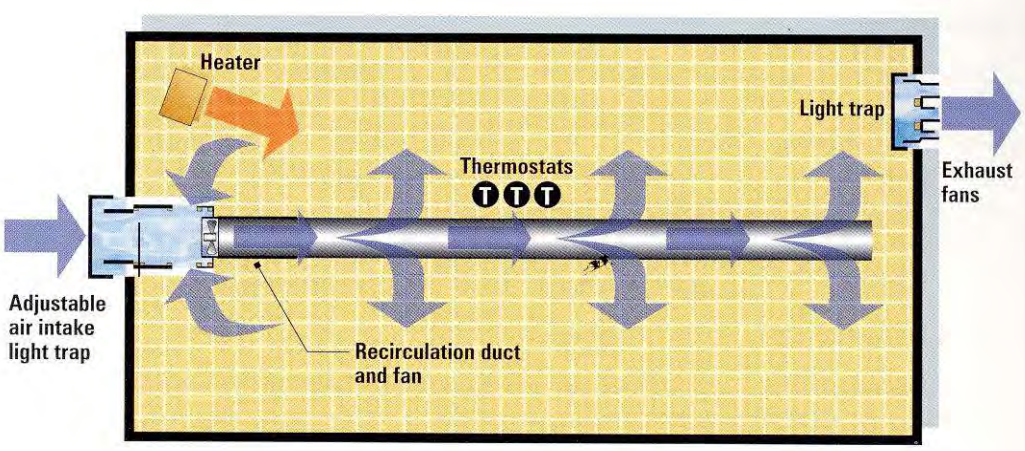

Figure 46. Ventilation system for overwintering hives

Livestock building ventilation fans are readily available and are quite satisfactory for honey bee wintering buildings. A two-speed recirculation fan is often used. It can be operated on low speed during the colder months when a minimum of fresh air is introduced and can be switched to high speed when cooling becomes more critical.

A continually running exhaust fan (Step 1, Table 6) provides moisture control in very cold weather. As the outdoor temperature increases, Steps 2, 3 and 4 are progressively turned on by

thermostats as additional cooling is required. The heater thermostat controls the minimum temperature and is set at the lowest desired temperature, normally approximately 4°C.

To ensure the Step 2 fan does not run when the heater is on, the setting between the heater and Step 2 thermostats should be approximately 3°C. The fan thermostats are then set in steps with a difference of approximately 2°C between steps. Mounting the thermostats side by side, preferably in the centre of the room, is also important to ensure proper sequencing of the heater and fans. Thermostats should not be located in the path of air from an inlet, doorway or heater.

Air mixing chamber

The proper distribution of air in the building is provided by the polyethylene duct recirculation system. As a result, the location of the exhaust fans is not critical. Locating all the fans at one end of the building may be more convenient and cheaper to install, and will not affect air distribution (Figure 47).

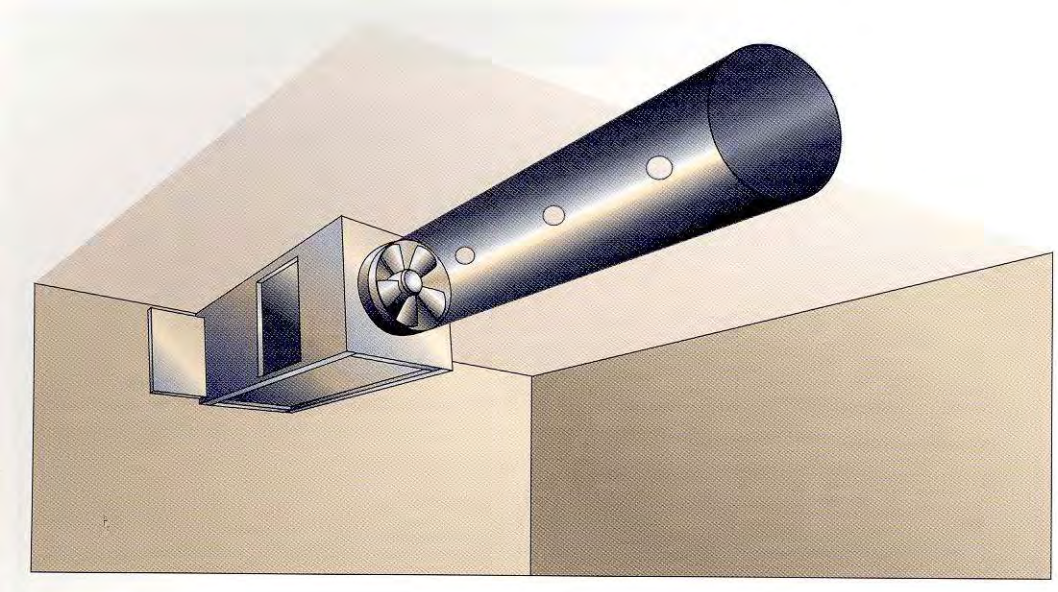

Figure 47. Air mixing chamber

Smaller storages (500 colonies or less) require very low airflow rates. It is often difficult to find a suitable fan in the size range required. Over-ventilating with too large a fan wastes energy and causes low relative humidities in the storage. One way to provide a small minimum airflow is to use one fan for both Step 1 and Step 2 ventilation. The fan is sized for the Step 2 rate and is operated intermittently by a timer to achieve a suitable Step 1 rate. For example, an adjustable 10-minute cycle timer set to run "ON" for 3.3 minutes every 10-minutes provides a Step 1 rate of 1/3 rated fan capacity and a Step 2 rate of full fan capacity.

The recommended air inlet size is 1 m^2 for every 5,000 L/s airflow. An inlet that is too small will restrict the exhaust fans and will cause reduced airflows. Too large an opening during cold periods will allow heat to flow out of the building under minimum ventilation. The maximum ventilation rate, Step 4, is approximately ten times the Step 1 rate. This rate requires the intake to be fully adjustable from maximum to minimum. The intake should be located close to the recirculation fan, so fresh air is well mixed and evenly distributed as it enters the storage.

The following Tables 7 through 10 offer design examples for ventilation with varying sizes of floor space and number of colonies.

Table 7. Ventilation Design Example for 100 Hives

Floor Space – Approximately 25 m^2

Fans	Recommended Airflow (L/s) Fan Capacity	Total Capacity		Recommended Fan*		Actual Airflow (L/s) Fan Capacity	Total Capacity
Step 1	25	25		BF-8, on 20%	Same	30	30
Step 2	50	75	One	BF-8	Fan	140	140
Step 3	100	175	Step	BF-8		140	140
Step 4	325	500		BF-10		235	375

Recirculation Duct – Airflow required: 500 L/s
Recommended fan: BF2S-12
Poly tube: 380 mm diameter x length of room
40 outlet holes, 50 mm diameter required

Intake Area – 0.1 m^2 maximum, adjustable to 0.005 m^2 mimimum

Heater Size – 1500 watts

** All fan models refer to Hurst Equipment Ltd.*

Table 8. Ventilation Design Example for 300 Hives

Floor Space – Approximately 75 m^2

Fans	Recommended Airflow (L/s) Fan Capacity	Total Capacity	Recommended Fan*		Actual Airflow (L/s) Fan Capacity	Total Capacity
Step 1	75	75	BF-8, on 50%	Same	70	70
Step 2	150	225	BF-8	Fan	140	140
Step 3	300	525	BF-10		235	375
Step 4	975	1500	BF-16		1240	1615

Recirculation Duct – Airflow required: 1500 L/s
Recommended fan: BF2S-16
Poly tube: 600 mm diameter x length of room
100 outlet holes, 50 mm diameter required

Intake Area – 0.3 m^2 maximum, adjustable to 0.015 m^2 mimimum

Heater Size – 3000 watts (3 kW)

** All fan models refer to Hurst Equipment Ltd.*

Table 9. Ventilation Design Example for 500 Hives

Floor Space – Approximately 125 m^2

Fans	Recommended Airflow (L/s) Fan Capacity	Total Capacity	Recommended Fan*	Actual Airflow (L/s) Fan Capacity	Total Capacity
Step 1	125	125	BF-8	140	140
Step 2	250	375	BF-10	235	375
Step 3	500	875	BF-12	500	875
Step 4	1625	2500	BF-18	1745	2620

Recirculation Duct – Airflow required: 2500 L/s
Recommended fan and poly tube:
Option 1: one BF2S-20 fan with 600 mm poly tube, 140-50 mm holes.
Option 2: two BF2S-16 fans with 600 mm poly tube, 100-50 mm holes.

Intake Area – 0.5 m^2 maximum, adjustable to 0.025 m^2 mimimum

Heater Size – 5000 watts (5 kW)

** All fan models refer to Hurst Equipment Ltd.*

Table 10. Ventilation Design Example for 1000 Hives

Floor Space – Approximately 250 m^2

Fans	Recommended Airflow (L/s) Fan Capacity	Total Capacity	Recommended Fan*	Actual Airflow (L/s) Fan Capacity	Total Capacity
Step 1	250	250	BF-10	235	235
Step 2	500	750	BF-12	500	735
Step 3	1000	1750	BF-16	1240	1975
Step 4	3250	5000	BF-20	2310	4285

Recirculation Duct – Airflow required: 5000 L/s
Recommended fan: two BF2S-20
Poly tube: two 600 mm diameter x length of room
140 outlet holes, 50 mm diameter required

Intake Area – 1.0 m^2 maximum, adjustable to 0.5 m^2 mimimum

Heater Size – 10 kW

** All fan models refer to Hurst Equipment Ltd.*

4. Light

Build the storage room to exclude as much light as possible. Too much light promotes bee activity and makes storage much more difficult. This is particularly true in late spring when outdoor temperatures are warm, and the bees sense that spring is at hand.

White light bulbs should be replaced with red ones, as bees cannot ‘see” the lower red rays of the colour spectrum. This type of lighting will allow the beekeeper to work within the storage with little disturbance to the bees.

The most difficult place to exclude light is at the air intake and fan openings. Several types of light traps are used. The principle of most is to force the ventilation air to make several right angle turns. A common problem is that discharged air from the fan is often forced to make an abrupt sharp turn. As a result, the fan operates at a higher pressure and a considerably reduced airflow.

Figures 48 and 49 show a design that effectively eliminates the light and causes minimal restriction for the fan. The trap for the exhaust fan should be installed on the inside of the building since it will affect the fan performance less than if installed on the discharge side of the fan. Painting the interior surface of the light traps a flat black will minimize reflection, helping to exclude light. Table 11 shows the dimensions to use for fans of varying diameter.

Figure 48. Light trap for intake fan

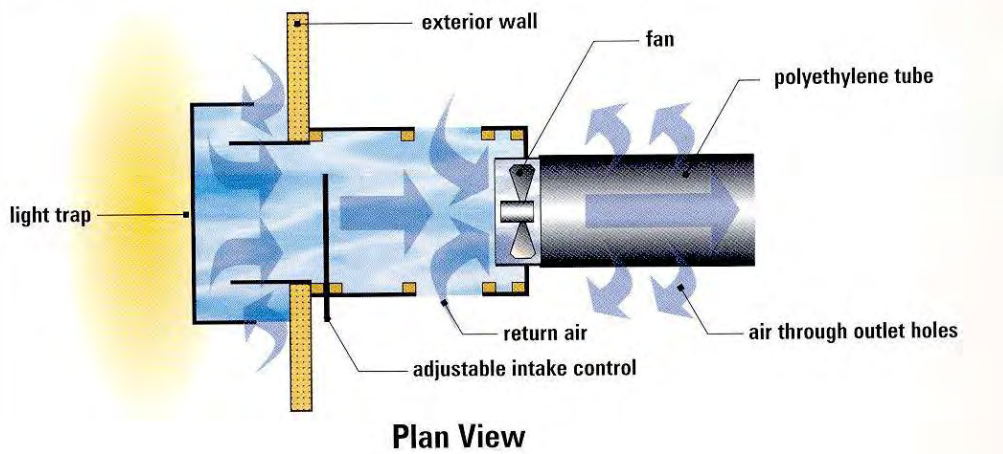

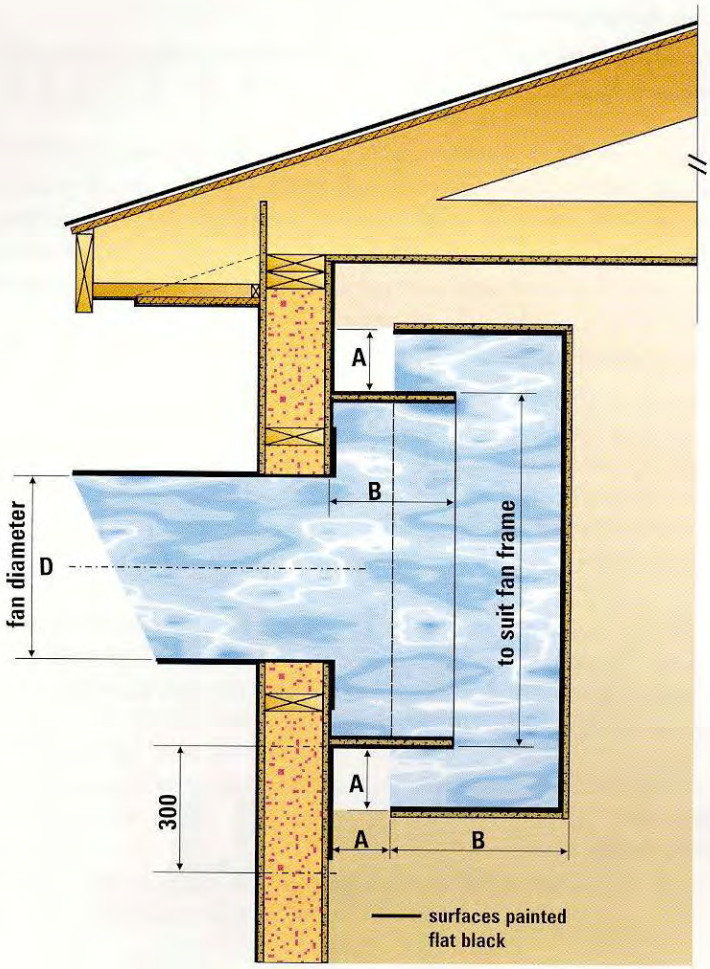

Figure 49.
Light trap for exhaust fan and dimensions to use for fans of varying diameter

Table 11. Fan Diameters

Fan Diameter (mm) "D"	Dimensions (min) "A"	(mm) "B"
200	25	75
250	38	115
300	64	200
400	100	300
450	125	375
500	150	450

Based on one light trap per fan open on four sides

Hive arrangement
Hives should be stacked in rows perpendicular to the air duct, with the rows spaced about 1 m apart to facilitate air movement.

Storage room floors should be swept periodically to dispose of dead bees. The dust caused by crushing the dead bees underfoot can often aggravate respiratory problems for the person(s) working in the building, or it can result in the development of allergies. Also, the dead bees may harbour fungal spores that could be harmful to human health. For this reason, face masks with filters should be used when working in the indoor wintering facility for long periods.

Feeding colonies indoors
At times, it may become necessary to feed bees sugar syrup while they are in storage. Frequently used feeding methods include gravity feeders, Boardman feeders and plastic honey containers (500 g size). To use honey containers, punch four or five small holes (3-4 mm in diameter) on one side of each container near the top rim. After the containers are filled with syrup and the lids fastened, they are placed inverted on the bottom board with the holes facing the hive entrance.

Indoor feeding may also require a modified hive stacking arrangement. A staggered or “off-set” stack that allows access to the top of each hive is needed if gravity feeders are to be used (Figure 50). If feeding is to be done through the entrance, the hives may be stacked directly on top of each other.

Figure 50.
Gravity feeders